ELECTROTECHNICAL TESTING INSTITUTE
Pod Lisem 129
171 02 Praha 8 - Troja

No. of pages:5
No. of annexes/No. of an. pages:2/11
Ref.:Dvo/Vl

No. of the Test Report: 100880-02/01

Issued:28.7.2011

TEST REPORT

Name of product:	Special Warning Lamp
Type of product:	WL135, WL136, WL145, WL146, WL150
Ratings:	12V DC, 1 x H1 (55W), category TA1
Serial number:	-
Manufacturer:	Zhongshan Jucar Auto Accessories Co., Ltd. No. 69, South Dongfu Road, Nantou, Zhongshan Guangdong, 528427 P.R.China
Production site:	-
EZÚ product coding system:	060301
Ordering firm:	Zhongshan Jucar Auto Accessories Co., Ltd. No. 69, South Dongfu Road, Nantou, Zhongshan Guangdong, 528427 P.R.China
Number of tested samples:	2
Samples submitted on:	11.7.2011
Location of testing:	EZU
Tested from	18.7.2011 **through** 28.7.2011
Other data:	Logo: NICAR
The product was tested according to:	ECE No. 65 + Supplement 1 - 6

The test results contained in this report refer to the tested items only. The values presented in this report were measured with the accuracy specified in the testing regulations. All measuring instruments used are properly traceable.

This Report shall not be reproduced except as a whole.

Compiled by: Zdeněk Dvořák

Approved by: Ing. Jiří Vlach
Testing laboratory
technical manager

Phone: +420 266104111 Fax: +420 284680070 E-mail: testing@ezu.cz
http://www.ezu.cz

Product description

A special warning lamp submitted for homologation is declared to be a warning light of „TA“ category, class „1“.

The special warning lamp is constructed for rated voltage of 12V.

Basic variants:

WL135
WL136
WL145
WL146
WL150

Category:

- “ T “ Rotating or stationary flashing lamp ☒
- “ X “ Directional flashing lamp ☐

Colour:

- “ A “ Amber light ☒
- “ R “ Red light ☐
- “ B “ Blue light ☐

Level of intensity:

- “ Class 1 “ One level of intensity ☒
- “ Class 2 “ Two levels of intensity ☐

Source of light:

- Filament lamp ☒
  - category H1, 12V 55W,
  - quantity 1
- Discharge lamp ☐
  - type
  - quantity
- Light source module ☐

Rated voltage

- 12V ☒
- 24V ☐

Testing

Clause	Test	Passed	Failed
3.1.	The lamp is provided with a trade name – applicant's mark; this marking is indelible and easily readable.	☒	☐
3.2	Each base, each cover and any external components of a special warning lamp which are necessary for its required performance shall include a space of sufficient size for the approval marking; these spaces shall be shown in the drawings.	☒	☐
3.3	Each special warning lamp shall be marked, legibly and indelibly, with the following information:: - The rated voltage - in the case of a special warning lamp device which is comprised of more than one separate unit, in brackets an identification mark for the specification of the individual separate unit - in the case of a lamp with a replaceable light source, the category of light source according to the relevant ECE Regulation; or - in the case of a lamp with a non-replaceable light source or a light source module, the rated wattage.	☒ ☐* ☒ ☐*	☐ ☐ ☐ ☐
3.4	Directional flashing lamps having a "wide angle effect" shall bear an arrow indicating the "wide angle" side and the mounting position.	☐*	☐
4.4	Special warning lamp is at a specified location bears the approval mark, including a category, colour and class.	☒	☐
4.5	In the case of lamps with light source module(s), the light source module(s) shall bear: the trade name or mark of the applicant; the specific identification code of the module; the marking of the rated voltage. This marking must be clearly legible and indelible.	☐*	☐
4.7	The approval mark and the markings referred to in paragraph 3. above shall be clearly legible and indelible even when the special warning lamp is mounted on the vehicle.	☒	☐
5.1	The special warning lamps must be so designed and constructed that in normal conditions of use, and notwithstanding the vibrations to which they may be subjected in such use, their satisfactory operation remains assured and they retain the characteristics prescribed by this Regulation.	☒	☐
5.2	The special warning lamp shall be so designed that after it has been mounted correctly on the vehicle, no maladjustment is possible.	☒	☐
5.3	When a non-replaceable light source is used it shall be permanently fixed to the special warning lamp.	☐*	☐

5.4	The design of the light source module(s) shall be such that even in darkness the light source module(s) can be fitted in no other position, but the correct one. The light source module(s) shall be tamperproof.	☐*	☐
5.5	In the case of a system that uses a special power supply, or a dedicated power supply, or light source control gear shall be part of special warning lamp.	☐*	☐
5.6	Frequency f a) flashing rate - ambient temperature +23°C ± 5°C b) flashing rate - ambient temperature -20°C c) flashing rate - ambient temperature +50°C d) flashing rate – rain test	☒	☐
5.7	A rotating or flashing special warning lamp device of Category T may consist of more than one optical system. In this case the requirements of Annex 5 paragraph 8 must be met. The lamp manufacturer must supply mounting information to ensure that the various units are correctly mounted on a vehicle.	☐*	☐
Annex 4	Rain test.	☒	☐
6.	Photometric specifications – Annex 5		
5 Př. 5	For any lamp equipped with non-filament light source(s), the luminous intensities measured after one minute and after 30 minutes of operation shall comply with the minimum and maximum requirements.	☐*	☐
7.1 Annex. 5	a) frequency f b) „ON“ time t_H c) „OFF“ time t_D	☒	☐
7.2 7.3 Annex.5	a) minimum effective luminous intensities $J_{e\,min}$ b) maximum effective luminous intensities $J_{e\,max}$	☒	☐
7.3.1 Annex. 5	a) Warning flash lamp (Category X) – narrow angle effect b) Warning flash lamp (Category X) – wide angle effect	☐* ☐*	☐ ☐
8 Annex. 5	If two or more optical systems are integrated in one special warning lamp, this unit has to comply with the following requirements:	☐*	☐
8.1 Annex. 5	Each optical system shall be in accordance with the requirements of this Annex within the horizontal angle which is not covered by one of the other optical systems. Furthermore, in each required direction at least one optical system shall be effective corresponding to the requirements of this Annex.	☐*	☐

8.2 Annex. 5	If a special warning lamp contains two or more optical systems, all the optical systems shall work in phase. This applies only to each half of a complete "bar" which is designed to extend on the width of the vehicle.	☐*	☐
8.3 Annex. 5	As long as the efficiency of the special warning lamp is to be secured all around the car a detection of the failure of a part of a special warning system shall exist on the car.	☐*	☐
7 Annex. 3	Trichromatic co-ordinates for the light emitted through the blue filters constituting the cover of special warning lamps.	☐*	☐

Remark:
**) The tests specified in calluses marked in this way do not relate to this lamp.*

- Measured values of each parameters are to be found in Enclosure No. 1 to this Test report.
- Find the photodocumentation in Enclosure No. 2.

Measuring and Testing Instruments

Flash Meter LMT SF 100 i.n. 5548
Goniophotometer LMT GOH 1300 i.n. 6037
Power supply HP 6038A i.n. 6037
Clinometer WYLER Clinotronic Plus i.n. 551141
Colorimeter PRC KROCHMANN 420 i.n. 5066
Climatic chamber Weiss WK 11-600/70-OZ i.n 110061
Oscilloscope Agilent DSO6012A i.n. 110183
Water spray test i.n. 864429
Standart lamp H1 12V 55W No.5

Compiled by: Zdeněk Dvořák

Photometric properties – Annex 5

Special warning light type: WL135, WL150

Operating conditions: ambient temperature –20°C,
Power supply voltage: $0,9U_{jm}$

Measured variable	Prescribed value	Measured values	
		Sample No. 1	Sample No. 2
Frequency f(Hz)	2 – 4	2,25	2,22
Correct operation	-	YES	YES

Operating conditions: ambient temperature +50°C,
Power supply voltage: $0,9U_{jm}$

Measured variable	Prescribed value	Measured values	
		Sample No. 1	Sample No. 2
Frequency f(Hz)	2 – 4	2,35	2,31
Correct operation	-	YES	YES

Operating conditions: ambient temperature +50°C,
Power supply voltage: $1,15U_{jm}$

Measured variable	Prescribed value	Measured values	
		Sample No. 1	Sample No. 2
Frequency f(Hz)	2 – 4	2,35	2,32
Correct operation	-	YES	YES

Operating conditions: ambient temperature +23°C ± 5°C
Power supply voltage: 0,9U_{jm}

Measured variable	Prescribed value	Measured values	
		Sample No. 1	Sample No. 2
Frequency f(Hz)	2 – 4	2,29	2,26
„on" time t_H (ms)	max. 0,4/f	42	54
„off" time t_D (ms)	min. 100	207	204
Correct operation	-	YES	YES

Operating conditions: ambient temperature +23°C ± 5°C
Power supply voltage: U_{jm}

Measured variable	Prescribed value	Measured values	
		Sample No. 1	Sample No. 2
Frequency f(Hz)	2 – 4	2,28	2,26
„on" time t_H (ms)	max. 0,4/f	42	55
„off" time t_D (ms)	min. 100	209	204
Correct operation	-	YES	YES

Operating conditions: ambient temperature +23°C ± 5°C
Power supply voltage: 1,15U_{jm}

Measured variable	Prescribed value	Measured values	
		Sample No. 1	Sample No. 2
Frequency f(Hz)	2 – 4	2,30	2,27
„on" time t_H (ms)	max. 0,4/f	41	53
„off" time t_D (ms)	min. 100	206	205
Correct operation	-	YES	YES

Measured minimum values of the effective luminous intensty J_e

Category T		Prescribed value (cd)	Measured values **effective luminous intensty J_e** (cd)	
			Sample No. 1	Sample No. 2
V 0°	by day	min. 230	--	--
	by night	min. 100	286	284
V +8°	by day	min. 170	--	--
	by night	min. 70	171	225
V -8°	by day	min. 170	--	--
	by night	min. 70	241	114

Measured maximum values of the effective luminous intensty J_e

Category T		Prescribed value (cd)	Measured values **effective luminous intensty J_e** (cd)	
			Sample No. 1	Sample No. 2
Inside ± 2°	by day	max. 1700	--	--
	by night	max. 700	317	298
Inside ± 8°	by day	max. 1500	--	--
	by night	max. 600	317→ 150	298 → 81
Outsider the above areas	by day	max. 1000	--	--
	by night	max. 300	< 150	< 81

Colorimetric properties – Annex 3

Requirements:

limit towards green : $y \leq x - 0.120$
limit towards red : $y \geq 0.390$
limit towards white : $y \geq 0.790 - 0.670\ x$

Measured values:

Sample No.	Chromaticity coordinates	
	x	y
1	0,5706	0,4262
2	0,5742	0,4229

Positions of measured chromaticity coordinate within a prescribed tolerance zone

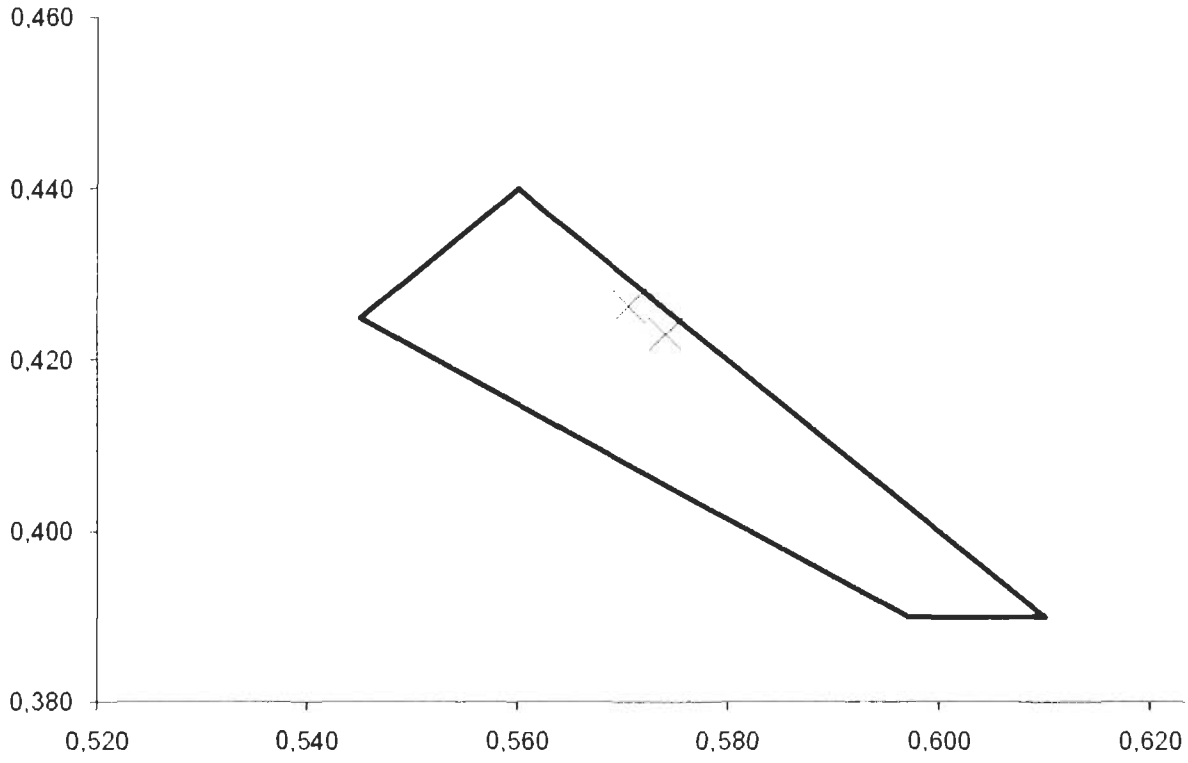

Photodocumentation

WL135







WL150









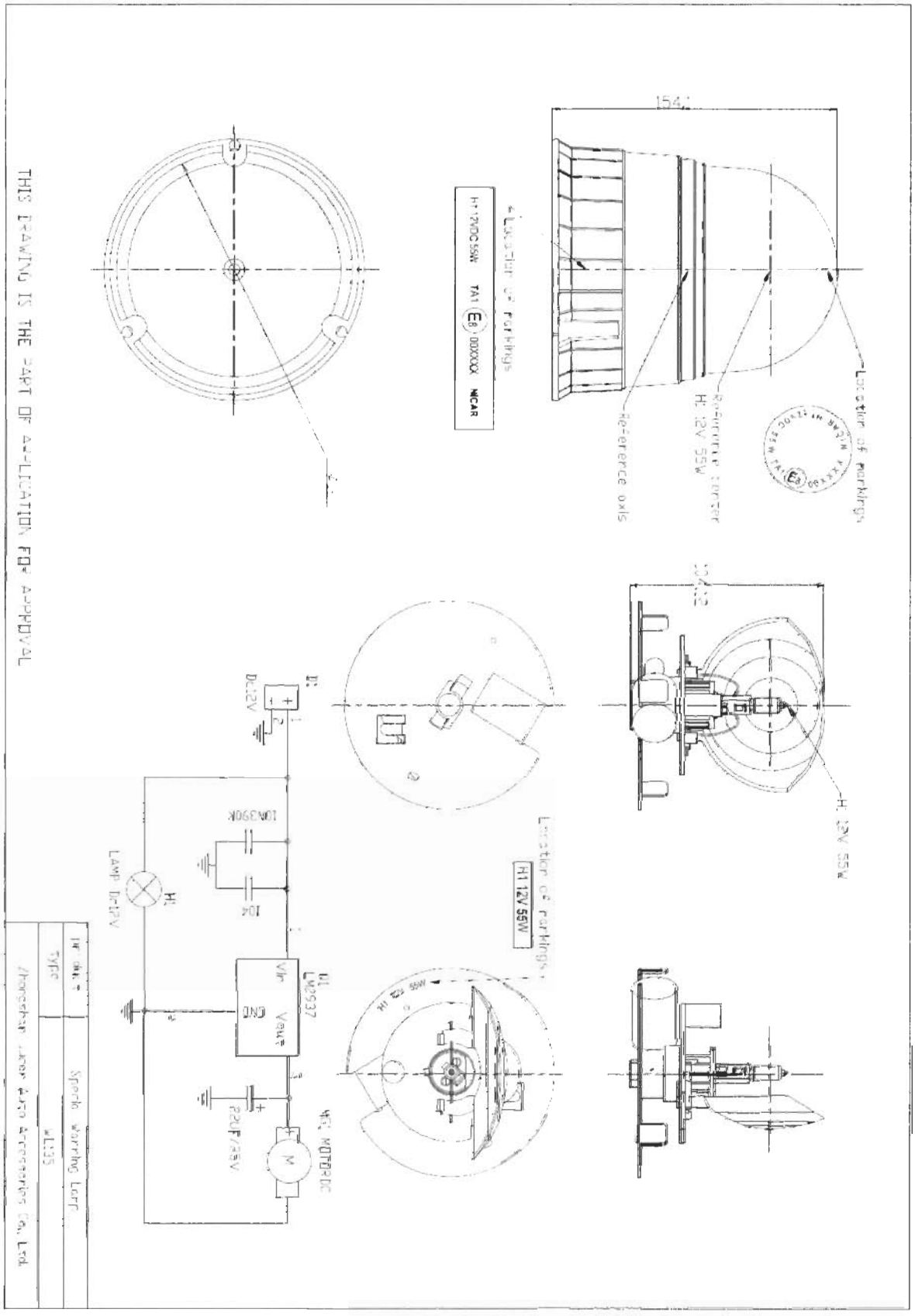
THIS DRAWING IS THE PART OF APPLICATION FOR APPROVAL
Location of markings
H1 12V 55W
Reference axis
Reference center
H1 12V 55W
Location of markings
H1 12V 55W
Location of markings
H1 12V 55W
H1 12V 55W
H1 12V 55W

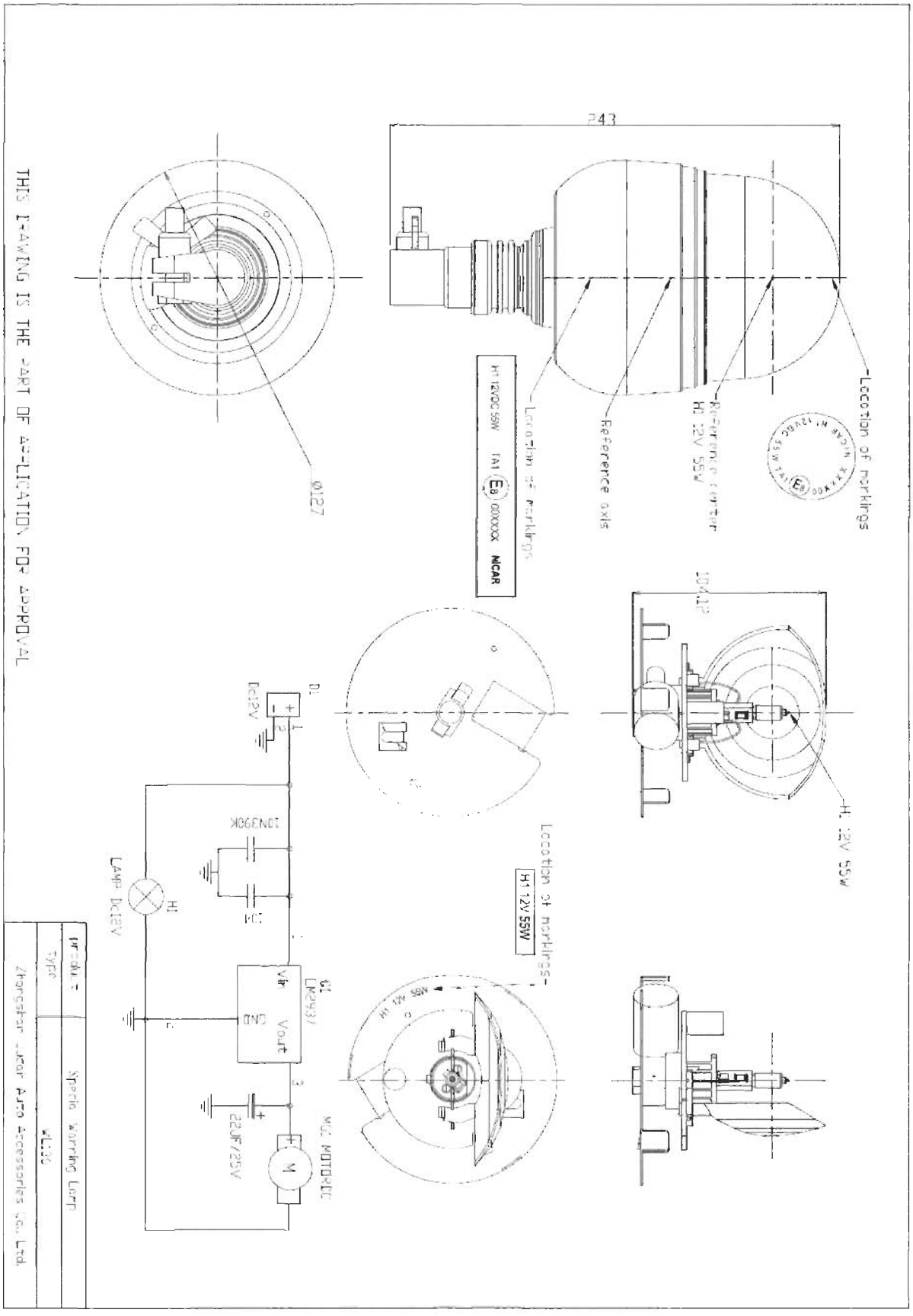
THIS DRAWING IS THE PART OF APPLICATION FOR APPROVAL
243
Location of markings
Reference center
H1 12V 55W
Reference axis
Location of markings
H1 12VDC 55W
TA1 E8 00XXXX NICAR
Ø127
104.12
H1 12V 55W
Location of markings
H1 12V 55W
D1
Dc12V
10N390K
10K
H1
LAMP Dc12V
G1
LM2937
Vin
Vout
GND
22UF/25V
M
MG1 MOTORDC
Product
Type
Special Warning Lamp
WL136
Zhongshan Lucar Auto Accessories Co., Ltd.

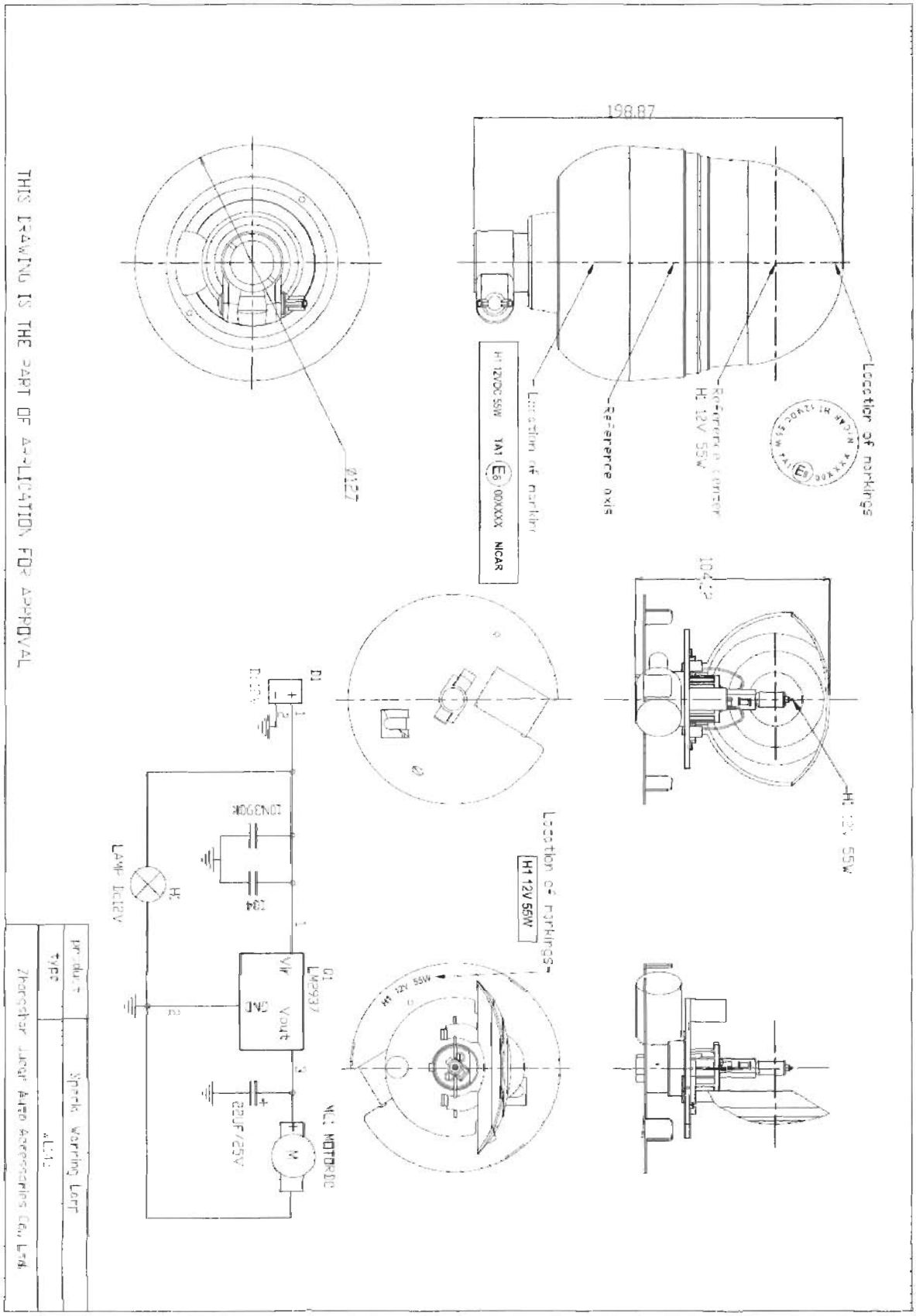
THIS DRAWING IS THE PART OF APPLICATION FOR APPROVAL
198.87
Location of markings
Reference center
H1 12V 55W
Reference axis
Location of marking
H1 12VDC 55W
TA1 E6 00XXXX NICAR
Ø127
104.12
H1 12V 55W
Location of markings
H1 12V 55W
D1
10N390K
LAMP DC12V
H1
D1
LM2937
Vin
Vout
GND
22UF/25V
MC1 MOTOR DC
product
type
Speak Warning Lamp
Zhongshan Jiaqi Auto Accessories Co., Ltd.

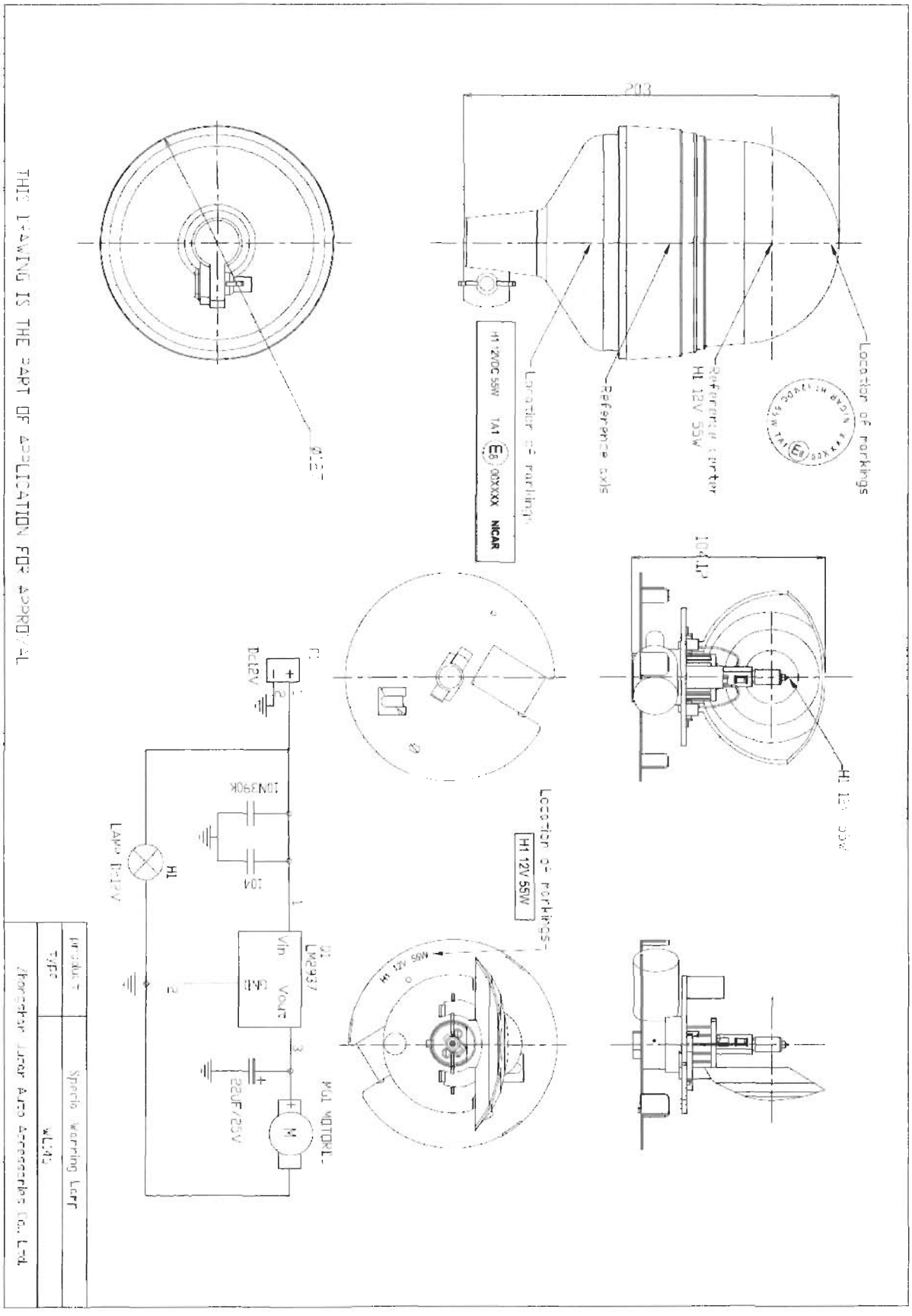
THIS DRAWING IS THE PART OF APPLICATION FOR APPROVAL
203
Location of markings
Reference center
H1 12V 55W
Reference axis
Location of markings
H1 12VDC 55W
TA1
00XXXX
NICAR
104.12
H1 12V 55W
Location of markings
H1 12V 55W
Dc12V
10N390K
10M
H1
LAMP Dc12V
D1
LM2937
Vin
Vout
GND
22UF/25V
M01 MOTOR
Specia warning Lamp
WL140
Shanghai Jucar Auto Accessories Co., Ltd.

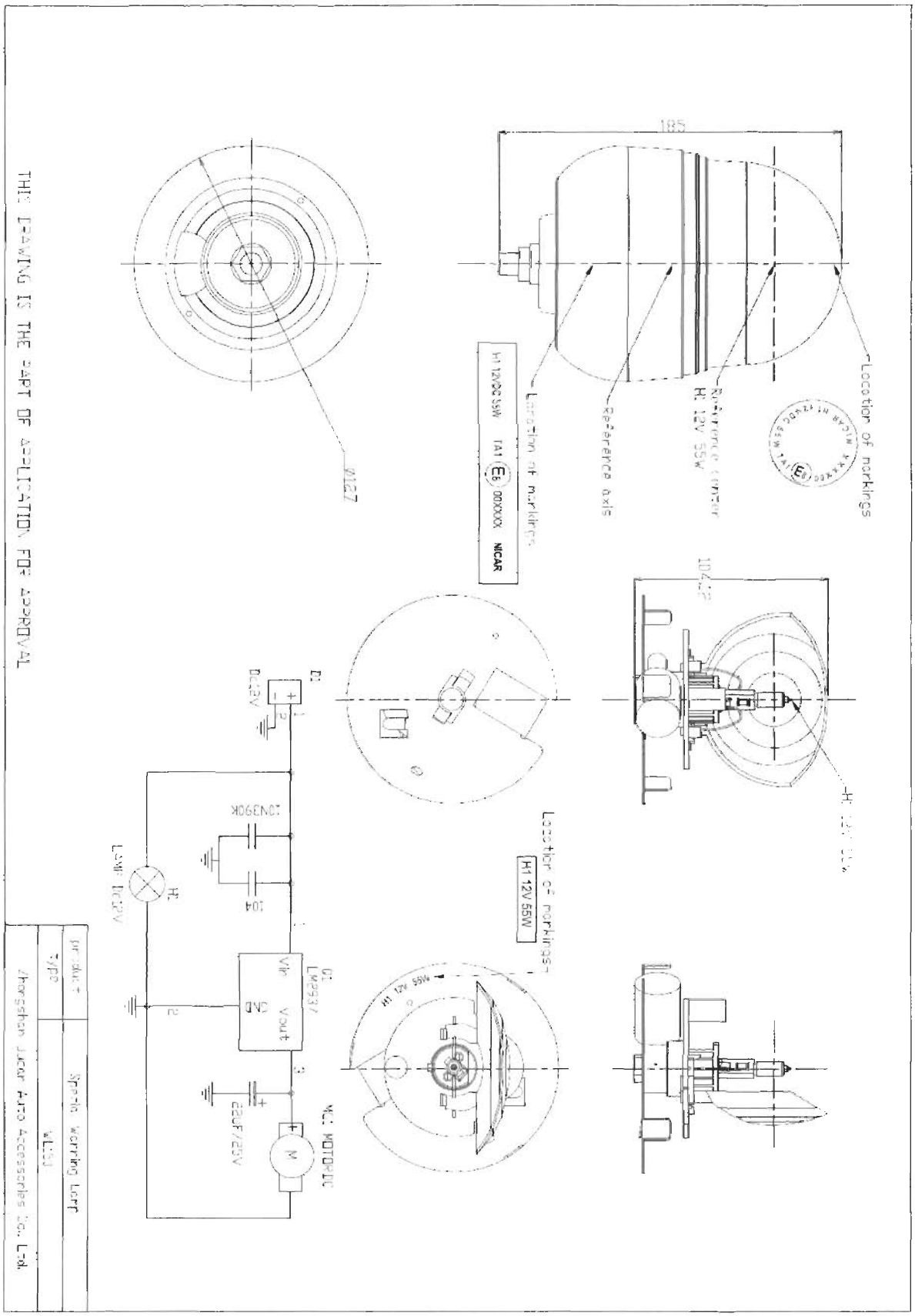
THIS DRAWING IS THE PART OF APPLICATION FOR APPROVAL
Location of markings
Reference axis
Reference center
H1 12V 55W
Location of markings
H1 12V 55W
Location of markings
H1 12V 55W
Ø127
185
104
D1
Dc12V
10N390K
104
H1
LAMP Dc12V
D1
LM2937
Vin
Vout
GND
22uF/25V
MC1 MOTORIC
product
Type
Special Warning Lamp
WL150
Zhongshan Jucar Auto Accessories Co., Ltd.